GIULINI G.
RUBINETTERIA

SURF

5870DL

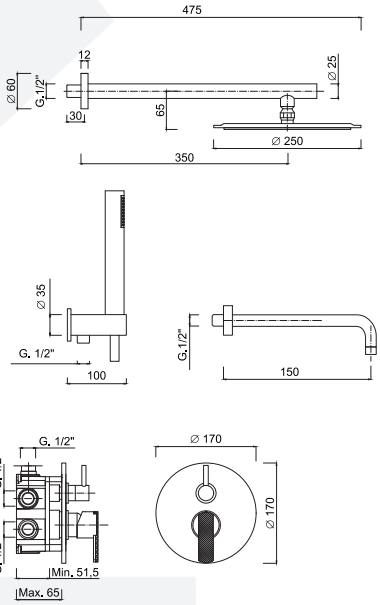

Cartuccia ceramica
Ceramic cartridge
3022

9 lt/min
Aeratore WATERSAVING, 9 Lt min
WATERSAVING aerator, 9 Lt per min

Inox
Inox

Sistema anticalcare
Anti-scale system

GG-BOX 5286
Box miscelatore doccia
Built-in shower mixer box

Cover
Cover

Valvola di sicurezza
Safety valve

Set doccia incasso monocomando con deviatore a rotazione, kit duplex, bocca parete, braccio parete, soffione Inox Ø 250.
Built-in single-lever shower set with rotating diverter, shower kit, wall spout, wall arm, stainless steel shower head Ø 250.
Ensemble de douche à encastrer avec inverseur rotatif, kit de douche, bec mural, bras mural, pomme de douche inox Ø 250.
UP-Einhandbrausegarnitur mit drehbarem Umsteller, Brauseset, Wandauslauf, Wandarm, Duschkopf aus Edelstahl Ø 250.
Conjunto de ducha monomando encastrable con desviador giratorio, kit de ducha, caño de pared, brazo de pared, rociador de acero inoxidable Ø 250.
Встраиваемый однорычажный душевой набор с поворотным переключателем, душевой набор, настенный излив, настенный кронштейн, верхний душ из нержавеющей стали Ø 250.

Articolo	Note	CROMO	NO	NKO	BROP - GF - CRN *	O - OSP *
5870DL		√	√	√	√	√

CROMO: *Cromo / Chrome-Plated* - **BO**: *Bianco Opaco / Matt White* - **NO**: *Nero Opaco / Matt Black* - **NKO**: *Nikel Opaco / Matt Nikel* - **BROP**: *Brondo opaco / Matt Bronze* - **GF**: *Grafite / Graphite* - **CRN**: *Cromo nero / Chrome Black* - **O**: *Oro / Gold* - **OSP**: *Oro SPazzolato / Brushed Gold*

Rubinetteria Giulini Giovanni srl
Via Salvo D'Acquisto, 22 - 28076 Pogno (No) Italy
Tel. +39 0322 97157 - www.giulini.it - info@giulini.it
Vendite Italia: italia@giulini.it / Tel. +39 0322 97157 - Vendite Export: export@giulini.it / Tel. +39 0322 97057