GIULINI G.
RUBINETTERIA

LINEA

6367

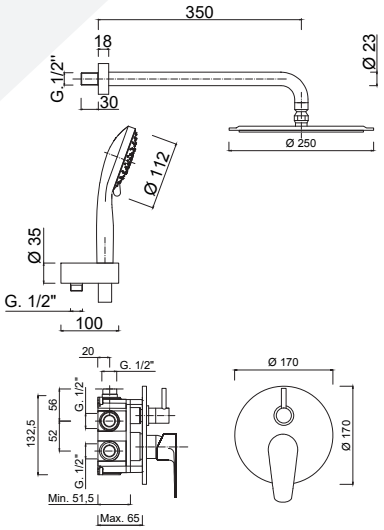

Cartuccia ceramica
Ceramic cartridge
3022

9 lt/min — Aeratore WATERSAVING, 9 Lt min
WATERSAVING aerator, 9 Lt per min

Inox
Inox

Sistema anticalcare
Anti-scale system

Cover
Cover

Valvola di sicurezza
Safety valve

GG-BOX 5285 — Box miscelatore doccia
Built-in shower mixer box

Set doccia incasso monocomando con deviatore a rotazione, kit duplex, braccio parete, soffione Inox Ø 250.
Single-lever built-in shower set with rotating diverter, shower kit, wall arm, Ø 250 stainless steel shower head.
Ensemble de douche monocommande à encastrer avec inverseur rotatif, kit douche, bras mural, pomme de douche inox Ø 250.
Einhebel-UP-Brausegarnitur mit drehbarem Umsteller, Duschset, Wandarm, Duschkopf aus Edelstahl Ø 250.
Conjunto de ducha monomando empotrado con desviador giratorio, kit dúcha, brazo de pared, rociador de acero inoxidable Ø 250.
Однорычажный встраиваемый душевой набор с поворотным переключателем, душевой набор, настенный кронштейн, душевая головка из нержавеющей стали Ø 250.

Articolo	Note	CROMO	NO	NKO	
6367		√	√	√	

CROMO: *Cromo / Chrome-Plated*

Rubinetteria Giulini Giovanni srl
Via Salvo D'Acquisto, 22 - 28076 Pogno (No) Italy
Tel. +39 0322 97157 - www.giulini.it - info@giulini.it
Vendite Italia: italia@giulini.it / Tel. +39 0322 97157 - Vendite Export: export@giulini.it / Tel. +39 0322 97057